Application

Parade Ground, Park and etc

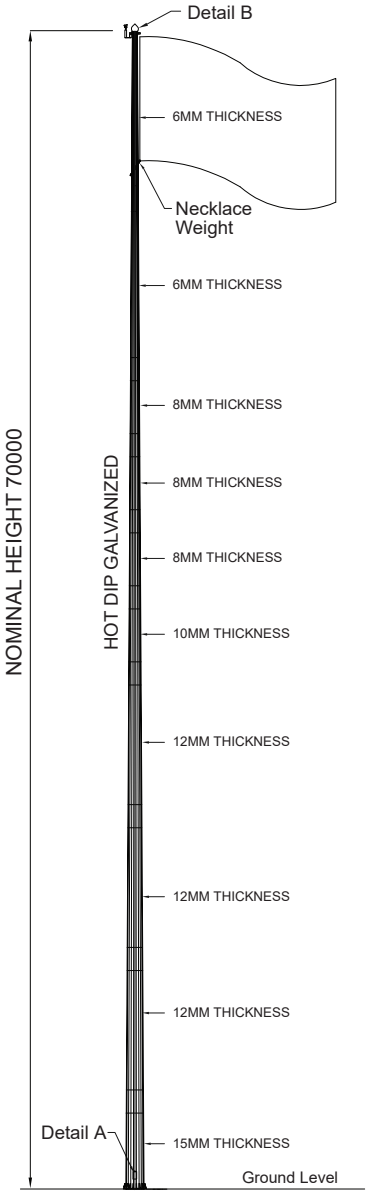

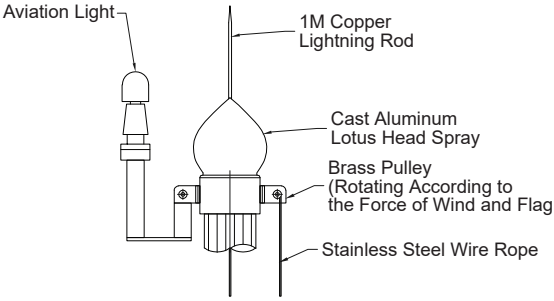

Detail B

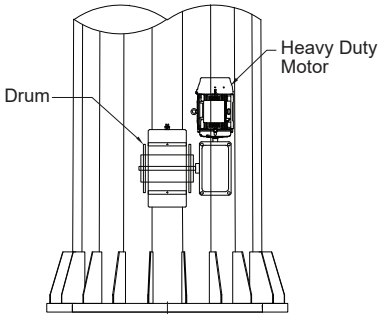

Detail A
Service Door for Motor

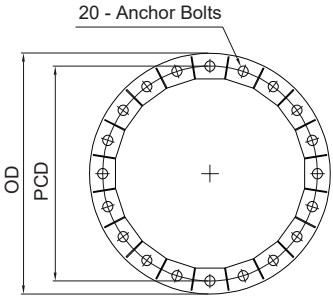

Base Flange